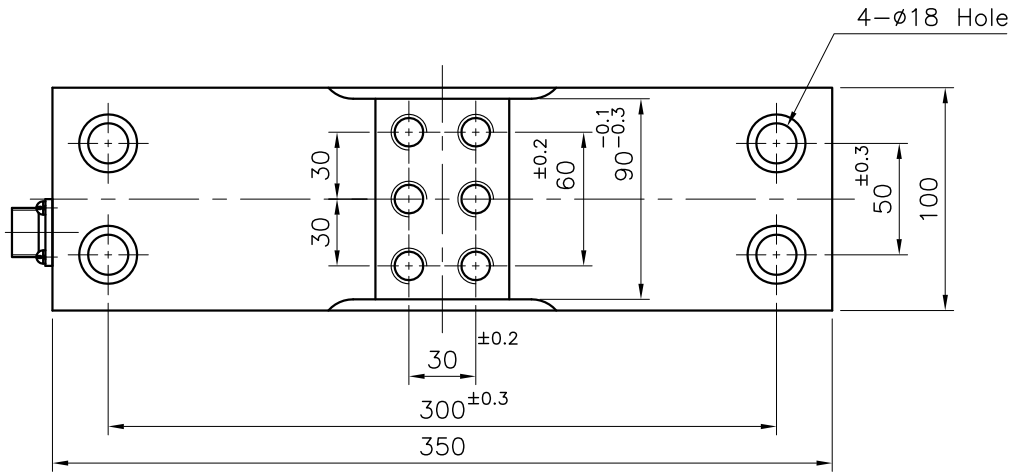

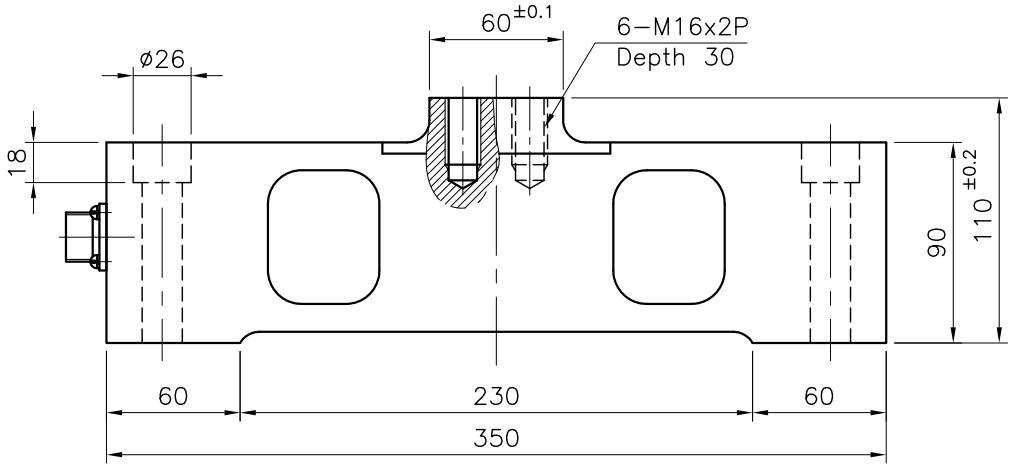

Model	CD30−30T
Rated capacity (R.C.)	30,000kg
Rated output (R.O.)	1.5mV/V ±0.5%
Non−linearity	≤ 0.1% R.O.
Hysteresis	≤ 0.1% R.O.
Non−repeatability	≤ 0.05% R.O.
Creep	≤ 0.05% R.O./20Min
Zero balance	±1% R.O.
Compensated temp. range	−10~150°C
Operating temp. range	−20~180°C
Temp. effect on rated output	≤ 0.05% LOAD/10°C
Temp. effect on zero balance	≤ 0.03% R.O./10°C
Terminal input resistance	750 ±50 ohm
Terminal output resistance	700 ±10 ohm
Insulation resistance (Min.)	2000 Mohm/50V DC
Excitation voltage	3~12V(Recomended),15V(Max)
Cable	ø5x20m(22AWGx4C)
Protection class	Meets IP67
Safe overload	150% R.C.
Ultimate overload	300% R.C.
Material	Nickel plated Alloy steel

NO	DESCRIPTION	MATERIAL	Q'TY	REMARKS

NO.	REVISION & DESCRIPTION	DATE	SIGNATURE

TITLE	CD30−30T Outline & Specifications				
SCALE	DRAWN	CHECKED	APPROVED	PROJ.NO.	
		YDJ		DWG.NO.	REV
DATE		250707		LS−CD30−030TOL11	0
BONGSHIN LOADCELL CO.,LTD.					